TachMatch Ignition Wiring, Current-Drive Tachometer

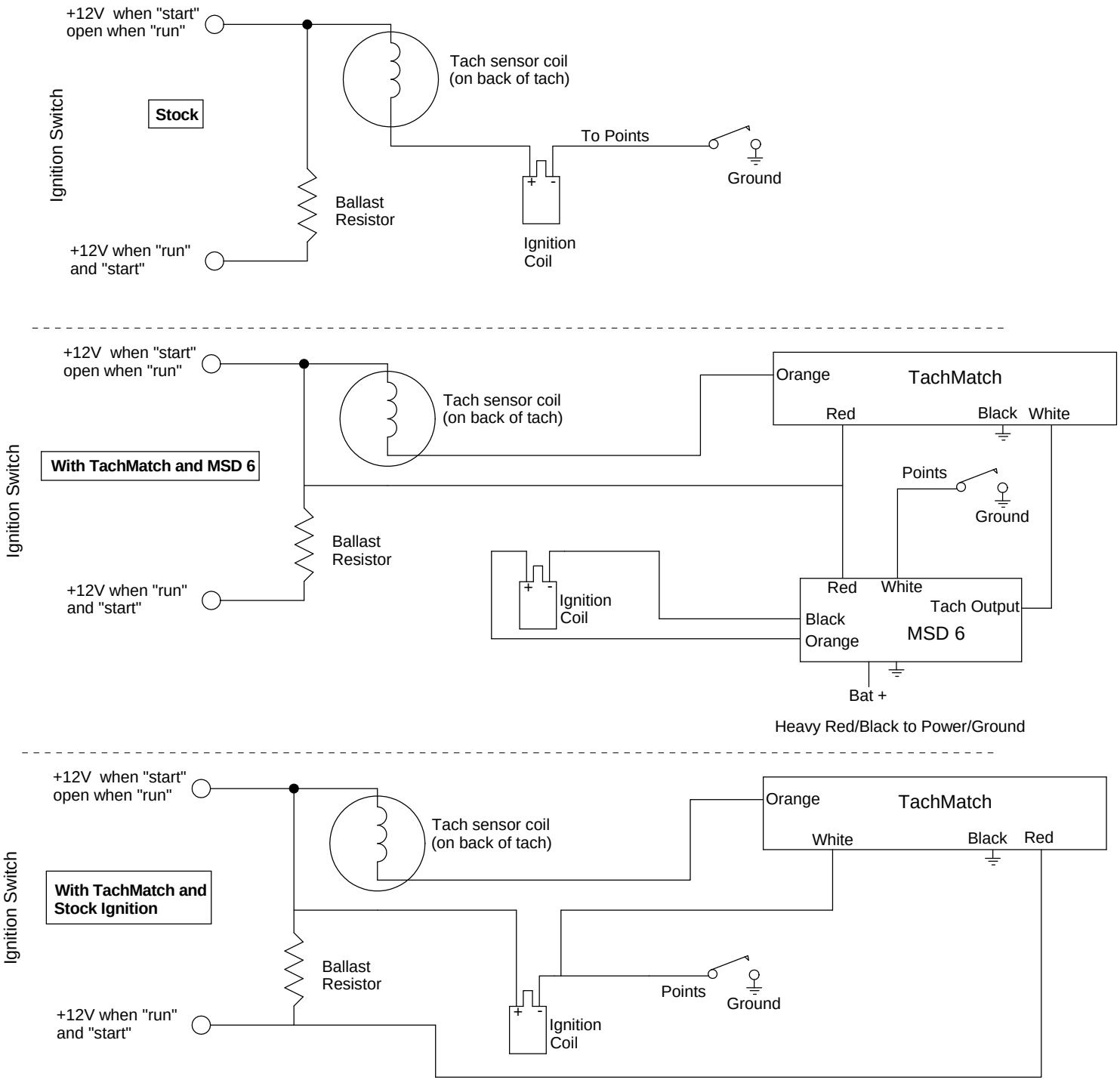

(TachMatchWithCurrentDrivenTach.dc)